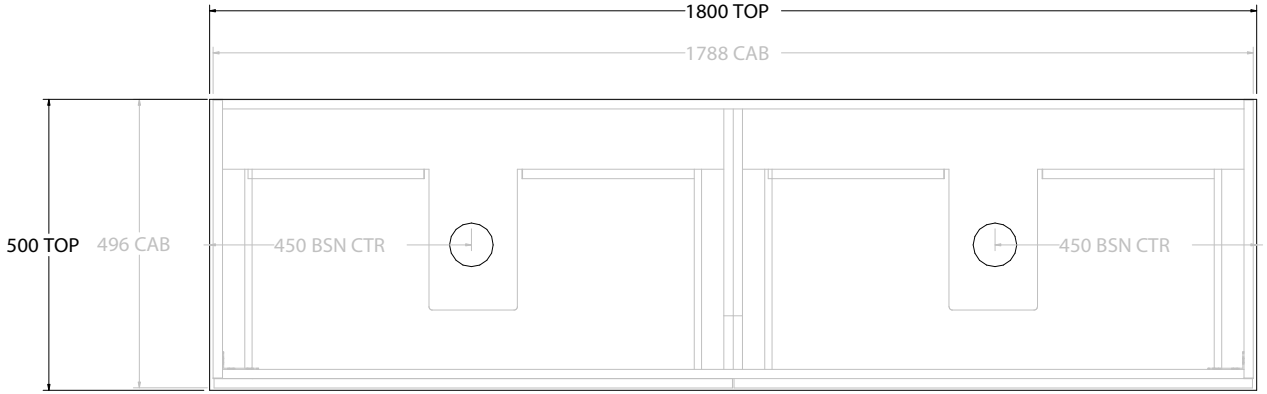

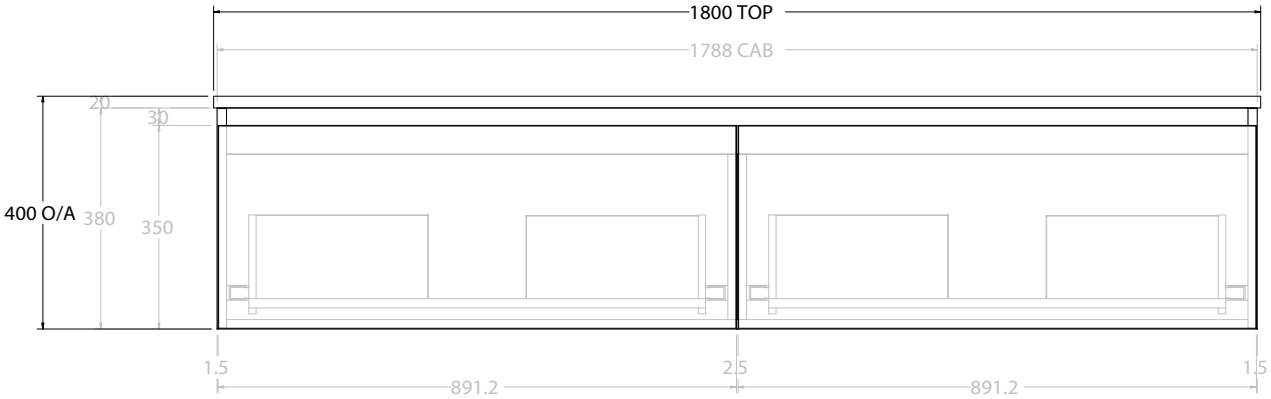

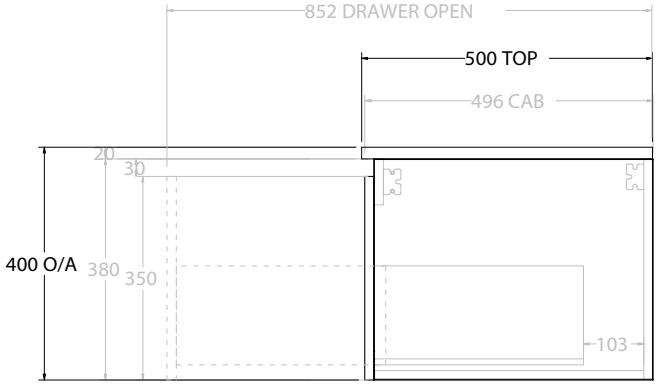

Adp

PRODUCT:	GLACIER ALL DRAWER SLIM 1800 WALL HUNG DOUBLE BASIN		
CODE:	LITE: GLLFAS1800WHD	PRO: GLPFAS1800WHD	
MOUNTING:	WALL HUNG		
SIZE:	1800W X 500D X 400H		
CONFIGURATION:	ALL DRAWER		
VERSION: 01	DATE: 22/08/22		

TOP:	BENCHTOP
BASIN POSITION:	DOUBLE BASIN

FOR TOP OPTIONS PLEASE ADD ONE OF THE FOLLOWING TO THE END OF PRODUCT CODE:
CHERRY PIE = CP
FRIDAY = FR
CAESARSTONE = CS

NOTES:

ALL DIMENSIONS ARE NOMINAL AND SUBJECT TO CHANGE.
DO NOT DRILL OR ROUGH IN UNTIL YOU HAVE RECEIVED AND MEASURED YOUR PRODUCT.
ALL DIMENSIONS ARE IN MILLIMETRES.
DO NOT MEASURE FROM DRAWING.