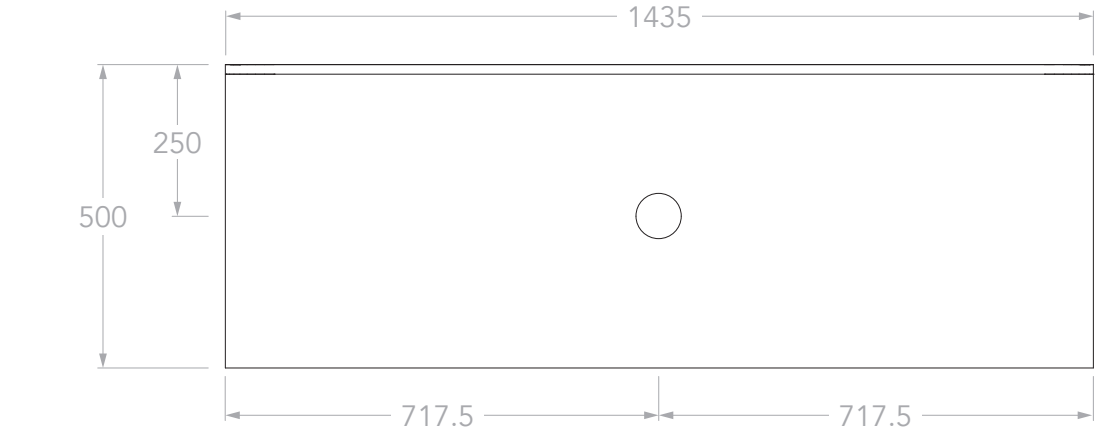

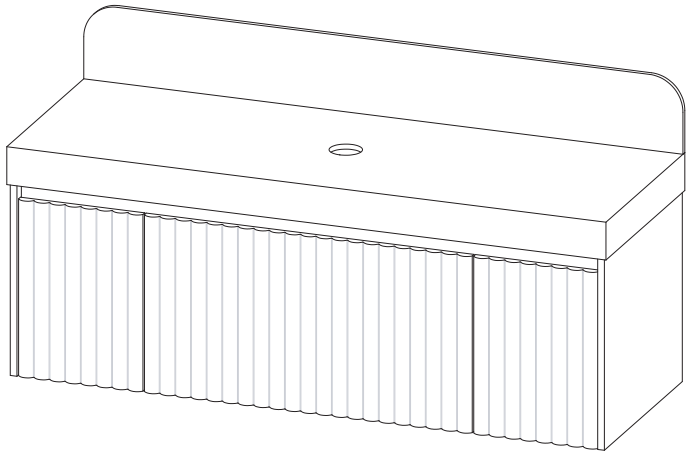

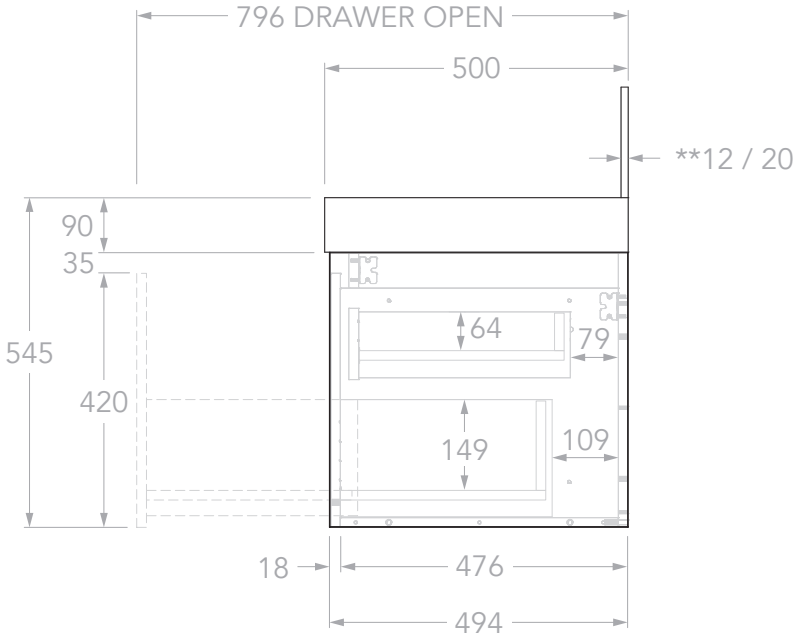

PRODUCT:	HARPER 1435 WALL HUNG	TOP:	90MM SOLID SURFACE BENCHTOP
SIZE:	1435W x 500D x 545/725H	BASIN POSITION:	CENTRE
CONFIGURATION:	ALL DRAWER, WALL HUNG	CODE:	HARFAS1435WHCCP - *(CHERRY PIE)* HARFAS1435WHCDU - *(DURASEIN)*
VERSION: 01	DATE: 30/01/2024		

NOTES:

DIMENSIONS ARE NOMINAL. DO NOT DRILL OR ROUGH IN UNTIL YOU HAVE RECIEVED AND MEASURED YOUR VANITY.

ALL DIMENSIONS ARE IN MILLIMETRES. DO NOT MEASURE FROM DRAWING.

**FOR DURASEIN FINISHES 12MM MATERIAL THICKNESS. 20MM THICKNESS FOR ALL OTHER BENCHTOP FINISHES.