PRODUCT:	SOUL WALL MIXER	
SIZE:	120H x 67D x 60W	
TYPE:	WALL MIXER	
VERSION: 02	DATE:	30/03/2023

CHROME (SOUL)	JTAPSSOUCP
MATTE WHITE (SOUL GROOVE)	JTAPSSOUWA
MATTE BLACK (SOUL GROOVE)	JTAPSSOUBA
BRUSHED NICKEL (SOUL GROOVE)	JTAPSSOUNK
BRUSHED BRASS (SOUL GROOVE)	JTAPSSOUBB
BRUSHED COPPER (SOUL GROOVE)	JTAPSSOUBCO

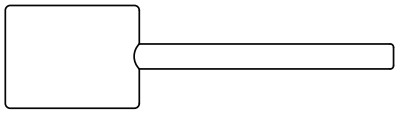

SOUL
(CHROME ONLY)

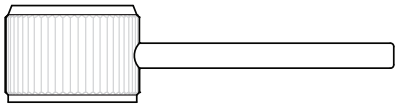

SOUL GROOVE

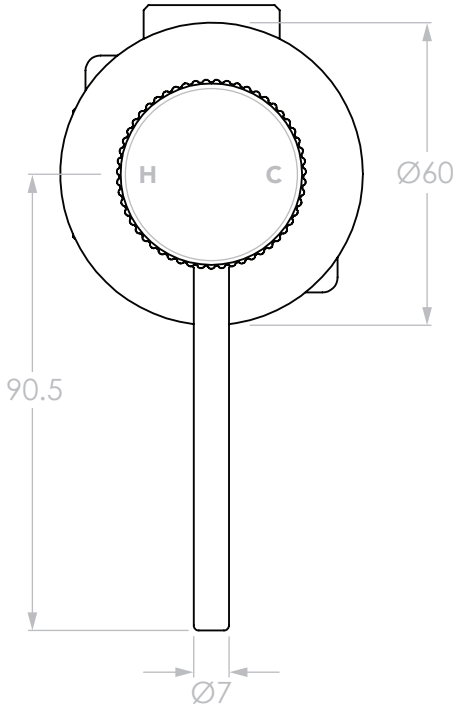

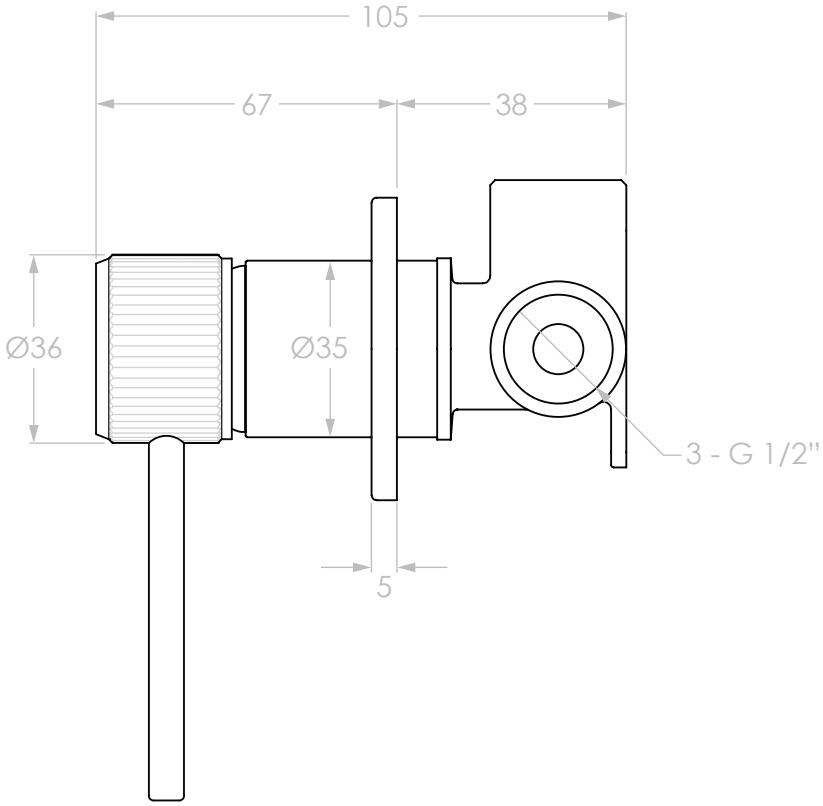

NOTES:

ALL DIMENSIONS ARE NOMINAL AND SUBJECT TO CHANGE.
DO NOT DRILL OR ROUGH IN UNTIL YOU HAVE RECEIVED AND MEASURED YOUR PRODUCT.
ALL DIMENSIONS ARE IN MILLIMETRES.
DO NOT MEASURE FROM DRAWING.

WATER SUPPLY REQUIREMENTS:

NOT RECOMMENDED FOR GRAVITY FED WATER SYSTEMS OR WATER TANKS.

WORKING PRESSURE:	350 – 500KPA	(INCLUDING COLD AND HOT WATER PRESSURE)
MAXIMUM PRESSURE:	73PSI / 500KPA	
TEMPERATURE RATING:	5°C - 65°C	(MUST NOT EXCEED 70°C)

INSTALLATION SHOULD COMPLY WITH AUSTRALIAN STANDARD AS/NZS 3500 OR RELEVANT LOCAL AUTHORITY REQUIREMENTS.